Plurio

96272364 <PLD O 18L105 NST BPSW CL2 D76 L730 S/G

Plurio

Decorative, post-top lantern with LED package with electronic driver. Class II electrical, IP66, IK08. Base in cast aluminium, powder coated silver-grey. Canopy in original shape, made from aluminium textured silver-grey (close to RAL9006) and textured dark grey (close to RAL7043). UV stabilised polycarbonate clear diffuser with anti-glare prisms. Internal narrow street reflector. Supplied complete in one box. Complete with 3000K LED

To be post top mounted on a spigot of Ø76mm, length 100mm.

Dimensions: Ø564 x 567 mm
Luminaire input power: 60 W
Weight: 8.1 kg
Scx: 0.074m²
Luminaire efficacy: 72 lm/W

TLG_PLRO_F_LEDSYM.jpg

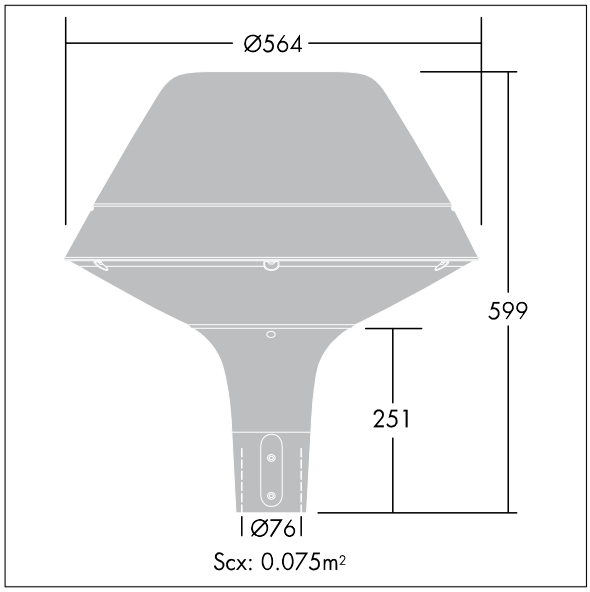

TLG_PLRO_M_LMPSHd76.wmf

This product contains a light source of energy efficiency class D.

All values marked with an * are rated values. Thorn uses tried and tested components from leading suppliers, however there may be isolated instances of technology-related failures of individual LEDs during the rated product lifetime. International standards set the tolerance in initial flux and connected load at ±10%. Unless stated otherwise, the values apply to an ambient temperature of 25°C.

Thorn Lighting is constantly developing and improving its products. The right is reserved to change specifications without prior notification or public announcement.
© Thorn Lighting

Plurio

96272364 <PLD O 18L105 NST BPSW CL2 D76 L730 S/G

Thorn Lighting is constantly developing and improving its products. The right is reserved to change specifications without prior notification or public announcement.
© Thorn Lighting