Thor Bollard

96264248 TR B S 10L25 730 RGB ASY CL1 MGR

Thor Bollard

An elegant vandal resistant asymmetrical slim bollard with high performance optic. For Electronic, fixed output control gear. IP66 Electrical Class I. Column and Base: aluminium (EW AW 6060). Canopy: die-cast aluminium (EN AC 44300). Diffuser: Clear anti UV polycarbonate. Gear Box: polycarbonate. Canopy and Column colour: powder coated anthracite (close to RAL7043) (close to RAL7043). RGB decorative lit band at the base of the head to be easily set at installation. Ready to install prewired luminaire. Connection box required, to be ordered separately. Complete with 3000K LED

Dimensions: 160 x 160 x 1017 mm
Luminaire input power: 8.9 W
Weight: 9.3 kg

TLG_ADLB_F_SLIMPDB.jpg

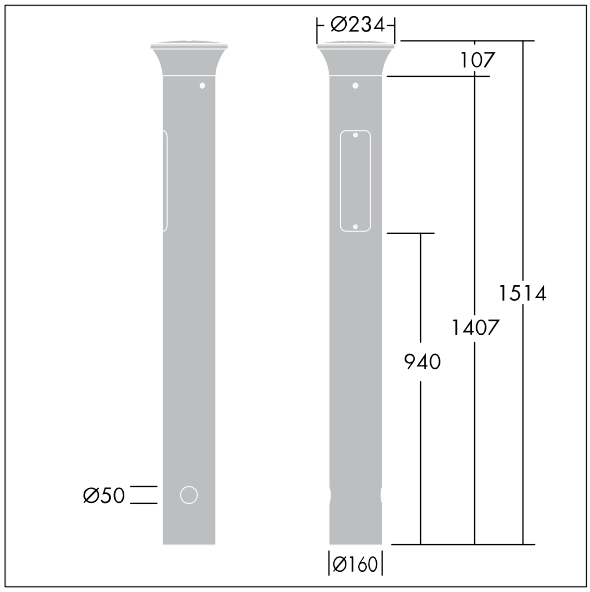

TLG_ADLB_M_SLIM_MRG.wmf

This product contains a light source of energy efficiency class D.

All values marked with an * are rated values. Thorn uses tried and tested components from leading suppliers, however there may be isolated instances of technology-related failures of individual LEDs during the rated product lifetime. International standards set the tolerance in initial flux and connected load at ±10%. Unless stated otherwise, the values apply to an ambient temperature of 25°C.

Thorn Lighting is constantly developing and improving its products. The right is reserved to change specifications without prior notification or public announcement.
© Thorn Lighting

Thor Bollard

96264248 TR B S 10L25 730 RGB ASY CL1 MGR

Thorn Lighting is constantly developing and improving its products. The right is reserved to change specifications without prior notification or public announcement.
© Thorn Lighting