Random

96206298 <PRISMA 2X28W HF OP SLDMD BASIC

TLG_PRSM_F_01.jpg

Random

Slim fluorescent luminaire for 2 x 28W Light Source: 2 x T16 / 28W lamps for surface mounted mounting. Body in white painted galvanized steel sheet with white plastic end caps and a opal acrylic diffuser. Keyhole fixing positions Ø14mm for direct mounting to ceiling or brackets. Fixing centres: 1100mm. Two cable entries Ø19mm in the rear of the body and knockouts in the endcaps. Grommets included. Piano key terminals 5 x 2 x 2.5mm². Fitted with high frequency sensor with on/off function, range from 0.5m to approximately 4m at a ceiling height of 2.4m, switch off delay from 2 to 30 minutes, twilight photocell 2-2000 lux, coverage 360° with an opening angle of 160°. This luminaire is suitable for small areas where one luminaire is sufficient. Please be aware, if used at maximum sensitivity, the sensor can detect through windows, doors and thin walls. The luminaire is not recommended to be placed outdoors or where material is moving, neither should it be exposed to vibrations. IP44 dust and moisture proof body extends application to canteens, cafeterias and kitchens. Can be suspended using wire suspension accessory (to be ordered separately. Lamps to be ordered separately.

Dimensions: 1216 x 166 x 64 mm
Luminaire input power: 61 W
Weight: 2.7 kg
Luminaire efficacy: 62 lm/W

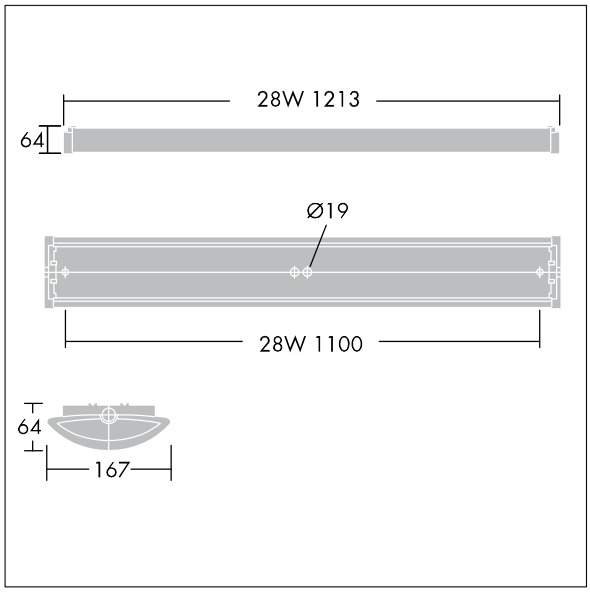

TLG_PRSM_M_LD1.wmf

All values marked with an * are rated values. Unless stated otherwise, the values apply to an ambient temperature of 25°C.

Thorn Lighting is constantly developing and improving its products. The right is reserved to change specifications without prior notification or public announcement.
© Thorn Lighting