96233683 VOYAGER ESCORT 1x8W T16 E3T OP WHI

A durable, all weather bulkhead with emergency and mains only versions, for surface mounting.

A self-contained, IP65, weatherproof bulkhead luminaire for 1 x 8W Light Source: 1 x T16-MF / 8W lamp(s). Durable, white, stove enamelled die-cast aluminium body and opal polycarbonate diffuser with vandal resistant screw fixings. Suitable for interior and exterior industrial or public amenity usage. Maintained, Explorer SelfTest, emergency lighting of 3 hours duration. A self-adhesive legend kit comprising left, right, up and down signs is available as an accessory. Mains only versions are also available.

Dimensions: 352 x 102 x 79 mm
Weight: 1.9 kg
Luminaire input power: 9 W

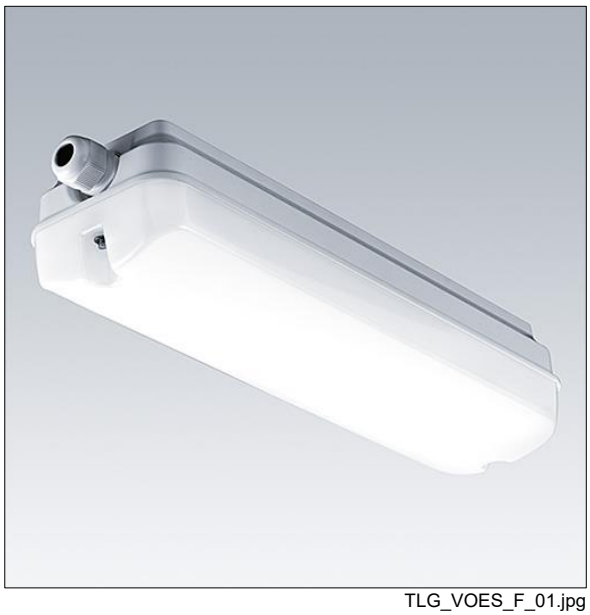

TLG_VOES_F_01.jpg

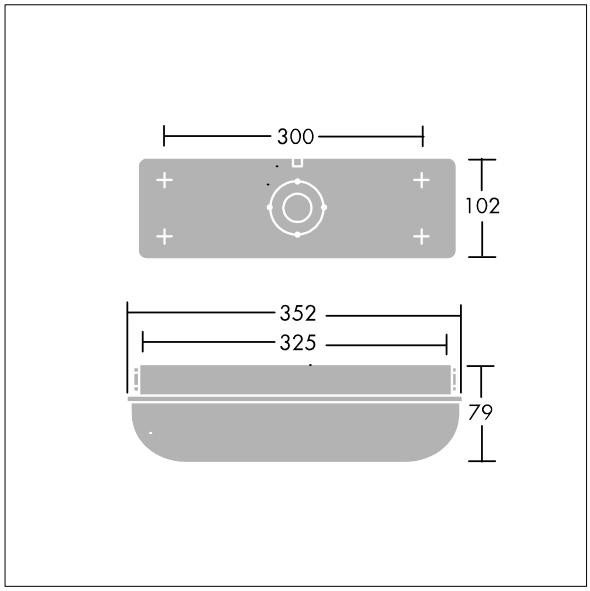

TLG_ESCT_M_LEDLD1.wmf

All values marked with an * are rated values. Unless stated otherwise, the values apply to an ambient temperature of 25°C.

Thorn Lighting is constantly developing and improving its products. The right is reserved to change specifications without prior notification or public announcement.
© Thorn Lighting