Primata 2 Trunking

96502641 <PR2 T TW 3525 7x2,5/28/54

Flexible and versatile continuous row lighting system for commercial and industrial applications

Primata II pre-wired trunking with 7 pole integrated wiring. Electrical connection points in modular distance for 28/54W luminaires.

Dimensions: 3525 x 60 x 51 mm
Weight: 4.49 kg

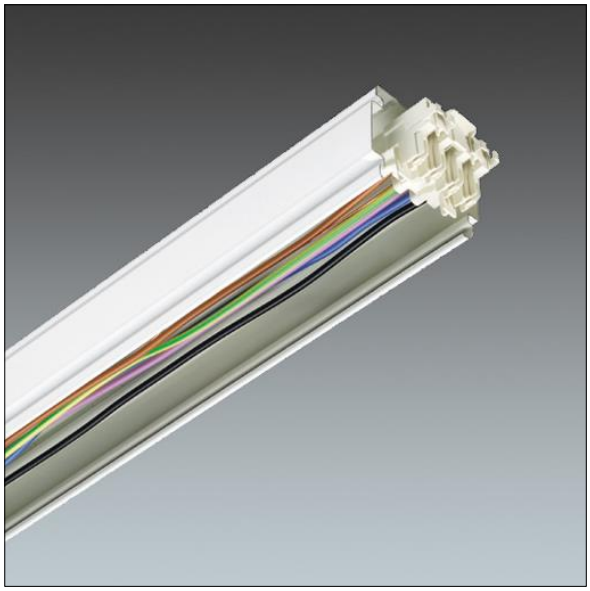

TLG_PMTA_F_TR.jpg

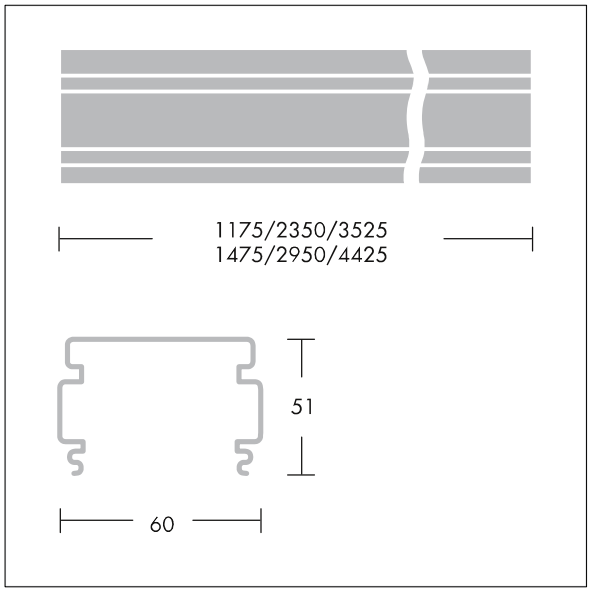

TLG_PMTA_M_TRT16.wmf

All values marked with an * are rated values. Unless stated otherwise, the values apply to an ambient temperature of 25°C.

Thorn Lighting is constantly developing and improving its products. The right is reserved to change specifications without prior notification or public announcement.
© Thorn Lighting