Amazon

96226945 <AM 2x9w TC-SEL HF RD S WHI

Amazon

Contemporary round bulkhead luminaire for 2 x 9W Light Source: 2 x TC-SEL / 9W lamp(s) with electronic - fixed output circuit. Bezel with white finish. Diffuser in opal polycarbonate. Supplied with Quick Fix fixing and wiring box. Complete with 840 lamp(s).

Dimensions: Ø295 x 79 mm
Luminaire input power: 18.5 W
Weight: 1.5 kg

TLG_AMZN_F_RDW.jpg

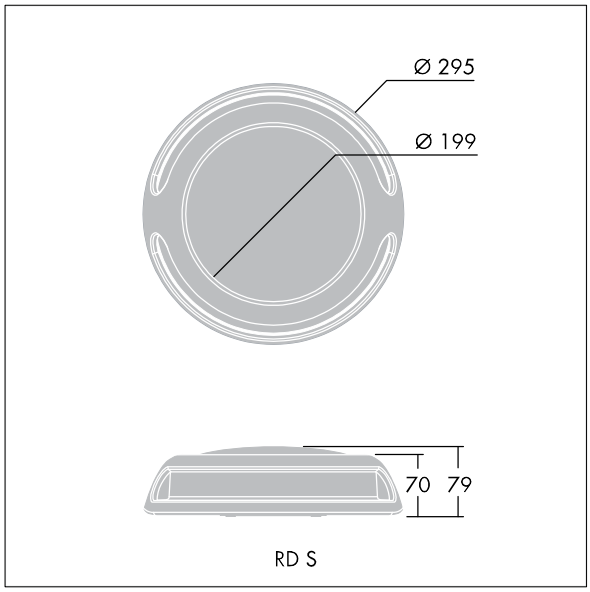

TLG_AMZN_M_LDSR.wmf

All values marked with an * are rated values. Unless stated otherwise, the values apply to an ambient temperature of 25°C.
Thorn Lighting is constantly developing and improving its products. The right is reserved to change specifications without prior notification or public announcement.
© Thorn Lighting