Thames

96226879 <TH 1x16w TC-DDEL HF RD S WHI

THORN

Thames has a concave diffuser face and tapered sides which create a unique and distinctive appearance. Backlighting generates a floating halo effect

Bulkhead luminaire for 1 x 16W Light Source: 1 x TC-DDEL / 16W lamp(s). electronic - fixed output circuit. white bezel and opal polycarbonate diffuser. round shape. Supplied with Quick Fix fixing and wiring box. Complete with 840 lamp(s).

Dimensions: Ø295 x 79 mm
Luminaire input power: 18 W
Weight: 1.7 kg

TLG_THMS_F_RDW.jpg

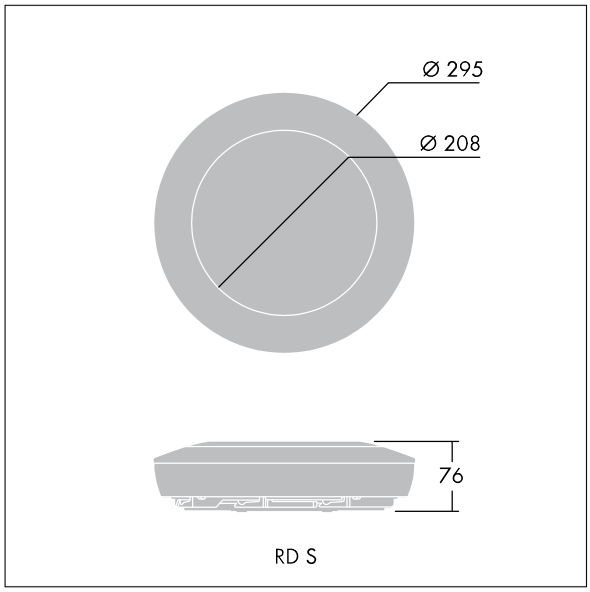

TLG_THMS_M_LDSR.wmf

All values marked with an * are rated values. Unless stated otherwise, the values apply to an ambient temperature of 25°C.

Thorn Lighting is constantly developing and improving its products. The right is reserved to change specifications without prior notification or public announcement.
© Thorn Lighting