Discontinued

96005548 <7297D REFLECTOR 2x58 RAL

Discontinued

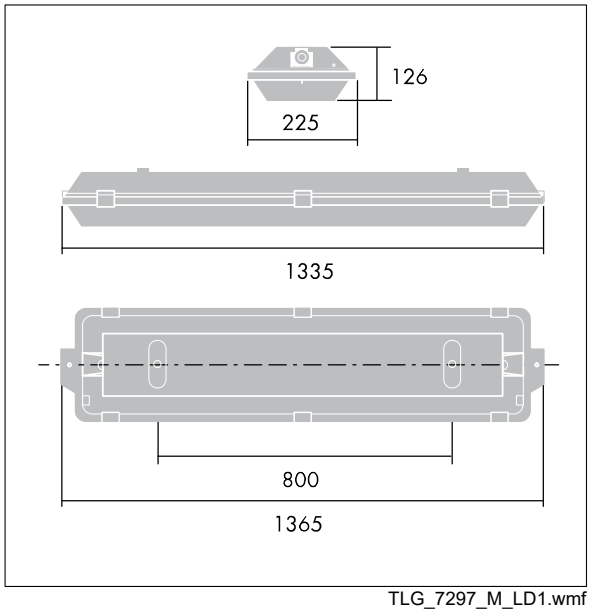

TLG_7297_M_LD1.wmf

Thorn Lighting is constantly developing and improving its products. The right is reserved to change specifications without prior notification or public announcement.
© Thorn Lighting