ForceLED Pro

96628262 ForceLED Pro 3000-840 HFI TW

ForceLED Pro

A robust luminaire, suitable to operate in ambient temperatures of up to 40°C. With 3000lm LED light engine. Electronic, DALI dimmable control gear. Class I electrical, IP66, 4xIK10. Body: die-cast aluminium with less than 1% copper content (LM6 equivalent) powder coated dark grey. Diffuser: polycarbonate. Safe-T Locking System (SLS): thermoplastic alloy of polycarbonate and acrylonitrile butadiene styrene (ABS). Gasket: liquid poured. Complete with 4000K LED

Dimensions: 760 x 167 x 120 mm
Luminaire input power: 26 W
Luminaire luminous flux: 3030 lm
Luminaire efficacy: 117 lm/W
Weight: 4 kg

TLG_FORP_F_PDB.jpg

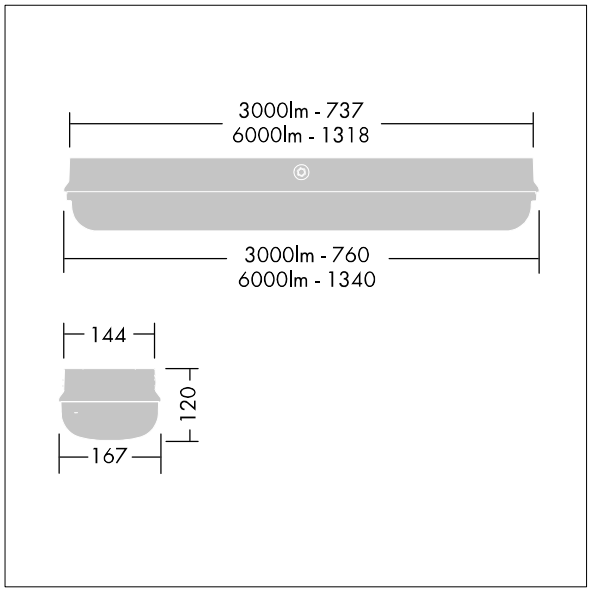

TLG_FORP_M_LD1.wmf

All values marked with an * are rated values. Thorn uses tried and tested components from leading suppliers, however there may be isolated instances of technology-related failures of individual LEDs during the rated product lifetime. International standards set the tolerance in initial flux and connected load at ±10%. Unless stated otherwise, the values apply to an ambient temperature of 25°C.

Thorn Lighting is constantly developing and improving its products. The right is reserved to change specifications without prior notification or public announcement.
© Thorn Lighting