Olsys Street

96274098 <OLSYS2 36L70-740 STR BP8 CL2

Olsys Street

An LED lantern with street distribution for urban street lighting applications. electronic bi-power. Class II electrical, IP66, IK08. Body: die-cast aluminium (AS9U), powder coated silver-grey (RAL 9006). Enclosure: tempered glass. Optics: aluminium. Supplied in one box, ready to install. Mounting attachments to be ordered separately. Equipped with power reduction circuit, effective 3 hours before and 5 hours after a calculated midnight. Complete with 4000K LED

Dimensions: 655 x 337 x 76 mm
Luminaire input power: 85 W
Weight: 8.45 kg
Scx: 0.17 m²

TLG_OSYS_F_2STRLIT.jpg

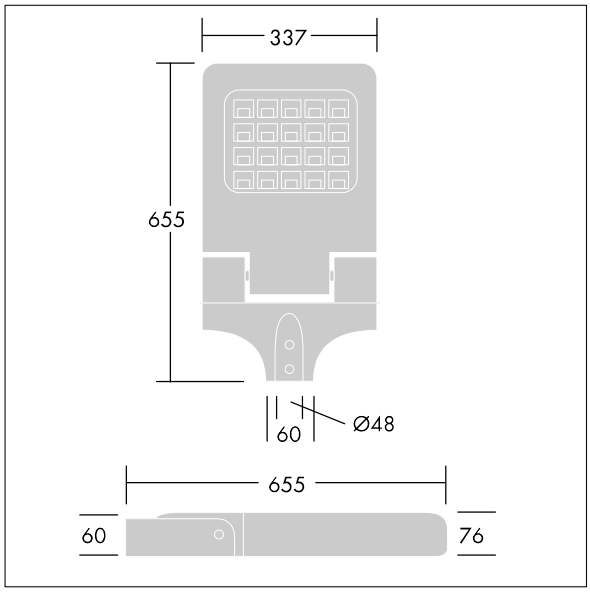

TLG_OSYS_M_STR2.wmf

All values marked with an * are rated values. Thorn uses tried and tested components from leading suppliers, however there may be isolated instances of technology-related failures of individual LEDs during the rated product lifetime. International standards set the tolerance in initial flux and connected load at ±10%. Unless stated otherwise, the values apply to an ambient temperature of 25°C.

Thorn Lighting is constantly developing and improving its products. The right is reserved to change specifications without prior notification or public announcement.
© Thorn Lighting

Olsys Street

96274098 <OLSYS2 36L70-740 STR BP8 CL2

Thorn Lighting is constantly developing and improving its products. The right is reserved to change specifications without prior notification or public announcement.
© Thorn Lighting