CiviTEQ

96643228 CQ 48L70 757 IVS CL2 M60 GY-S

THORN

CiviTEQ

A large size LED road lighting lantern with 48 LEDs driven at 700mA with Pedestrian Crossing optic.. Class II electrical, IP66, IK08. Housing: die-cast aluminium (EN AC-44300), Light grey 150 sanded textured (close to RAL9006). Enclosure: toughened glass. Screws: stainless steel, Ecolubric® treated. Supplied with Ø60mm spigot adaptor which can be fitted for post-top (0°/5°/10° tilt) or side-entry (-20°/-15°/-10°/-5°/0° tilt). Complete with 5700K LED. Surge protection: 10kV single pulse common mode and 8kV multipulse common mode and 6kV multipulse differential mode. If permanent DALI system is connected, 6kV multipulse common and differential mode.

Dimensions: 580 x 230 x 160 mm

Weight: 9.2 kg
Scx: 0.115 m²

TLG_CTEQ_F_LMTP72LEDPDB.jpg

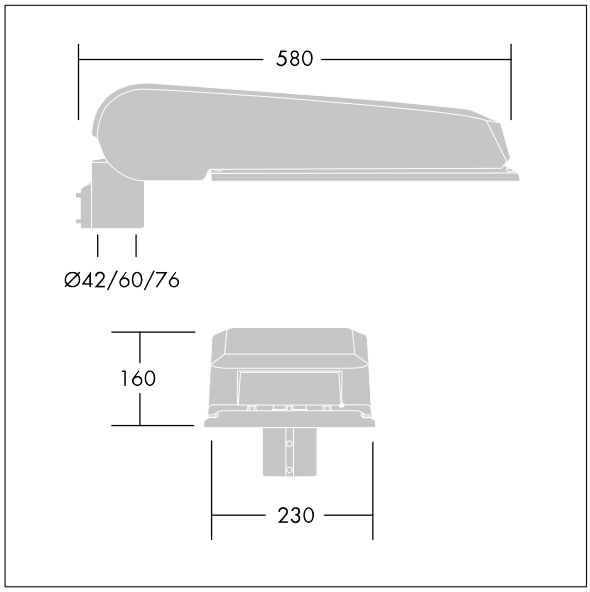

TLG_CETQ_M_L.wmf

This product contains a light source of energy efficiency class D.

All values marked with an * are rated values. Unless stated otherwise, the values apply to an ambient temperature of 25°C.

Thorn Lighting is constantly developing and improving its products. The right is reserved to change specifications without prior notification or public announcement.
© Thorn Lighting

CiviTEQ

96643228 CQ 48L70 757 IVS CL2 M60 GY-S

Thorn Lighting is constantly developing and improving its products. The right is reserved to change specifications without prior notification or public announcement.
© Thorn Lighting