Omega Circular

96627765 OMEGA C LED1600-830 HFIX R200

THORN

Omega Circular

A versatile, circular edge lit panel for recessed mounting in a Ø200mm cutout. Electronic, DALI dimmable control gear. Class II electrical, IP20. Body: aluminium and steel, white (RAL 9016). Diffuser: acrylic opal. Complete with 3000K LED.

Dimensions: Ø230 x 28 mm
Luminaire input power: 16.4 W
Luminaire luminous flux: 1579 lm
Luminaire efficacy: 96 lm/W
Weight: 1 kg

TLG_OMGC_F_R200PDB.jpg

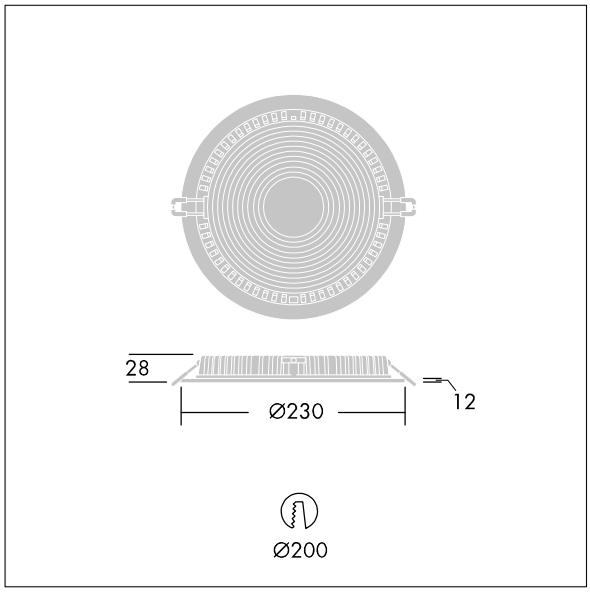

TLG_OMGC_M_1600.wmf

All values marked with an * are rated values. Thorn uses tried and tested components from leading suppliers, however there may be isolated instances of technology-related failures of individual LEDs during the rated product lifetime. International standards set the tolerance in initial flux and connected load at ±10%. Unless stated otherwise, the values apply to an ambient temperature of 25°C.

Thorn Lighting is constantly developing and improving its products. The right is reserved to change specifications without prior notification or public announcement.
© Thorn Lighting