EP 145

96269234 EP 145 LED 24L35 NR 730 RS/MSU

THORN

EP 145

A 19th Century styled suspended lantern with 24 LEDs driven at 350mA with Narrow Road optic. Class II electrical, IP66, IK08. Body: stainless steel, painted black (close to RAL9005). Canopy: GRP/Polyester, black (close to RAL9005) finish. Enclosure: 5mm thick tempered glass. Complete with 3000K LED

Dimensions: 420 x 420 x 944 mm
Luminaire input power: 28 W
Weight: 10.3 kg
Scx: 0.145 m²

TLG_EP14_F_LEDMSUBLKPDB.jpg

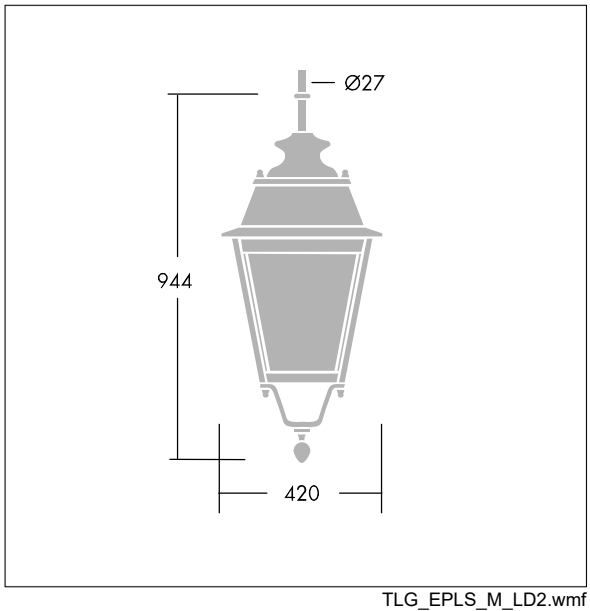

TLG_EPLS_M_LD2.wmf

This product contains a light source of energy efficiency class D.

All values marked with an * are rated values. Thorn uses tried and tested components from leading suppliers, however there may be isolated instances of technology-related failures of individual LEDs during the rated product lifetime. International standards set the tolerance in initial flux and connected load at ±10%. Unless stated otherwise, the values apply to an ambient temperature of 25°C.

Thorn Lighting is constantly developing and improving its products. The right is reserved to change specifications without prior notification or public announcement.
© Thorn Lighting

EP 145

96269234 EP 145 LED 24L35 NR 730 RS/MSU

Thorn Lighting is constantly developing and improving its products. The right is reserved to change specifications without prior notification or public announcement.
© Thorn Lighting