# ImpactForce II

## 96240454 IMPACTF2 2X49W T16 HFI E3 L000

THORN

### ImpactForce II

A high performance IP65 dust and moisture resistant luminaire with a high impact resistance. For 2 x 49W Light Source: 2 x T16 / 49W lamp(s) with Electronic, DALI / DSI digital dimmable control gear circuit and integral 3 hour manual test emergency lighting function. Class I electrical. Canopy in light grey glass fibre reinforced polyester. Diffuser in polycarbonate with internal prisms. For surface or suspended mounting. Quick-fix installation brackets are supplied for surface mounting, optional accessory kits are avalable to help with other mounting options. Lamps to be ordered separately.

Dimensions: 1594 x 167 x 125 mm
Luminaire input power: 106 W
Weight: 3.92 kg

TLG_XFRC_F_COL1.jpg

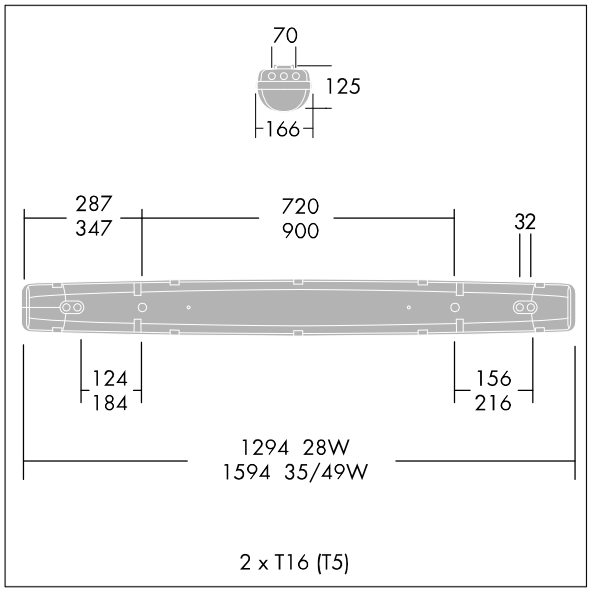


TLG_XFRC_M_TWLDT16.wmf

All values marked with an * are rated values. Unless stated otherwise, the values apply to an ambient temperature of 25°C.

Thorn Lighting is constantly developing and improving its products. The right is reserved to change specifications without prior notification or public announcement.
© Thorn Lighting

# ImpactForce II

## 96240454 IMPACTF2 2X49W T16 HFI E3 L000

Thorn Lighting is constantly developing and improving its products. The right is reserved to change specifications without prior notification or public announcement.
© Thorn Lighting