Voyager Star

96548969 VOYAGER STAR KIT SPOT E3

Voyager Star

High performance, LED emergency lighting kit for incorporation into a suitable housing (not supplied), Self contained luminaire, manual test (3 hours) with spot lighting optic.. Lens: polycarbonate. Optimum thermal management via heat sink. Voltage supply: 220-240 V AC (+/- 10%) 50-60 Hz Complete with LEDs..

Self-contained emergency luminaires rely on long-lasting batteries. Thorn batteries are robust and comes with a three-year guarantee (applicable subject to the terms and conditions of and to the extent as set forth in the manufacturer's guarantee on Thorn products, which shall be applicable analogously and which is available under http://www.thornlighting.com/en/products/5-year-guarantee/5-year-warranty/terms-of-guarantee_en.pdf. The battery guarantee shall not come into effect if the product has been installed later than three(3) months after delivery EXW (Incoterms 2010).

Luminaire input power: 4 W
Weight: 0.5 kg

TLG_VSTR_F_KIT_E3_SPOT.jpg

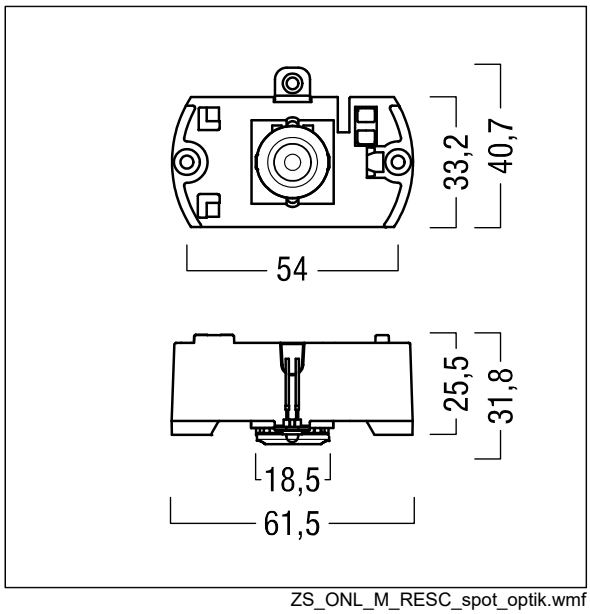

ZS_ONL_M_RESC_spot_optik.wmf

All values marked with an * are rated values. Thorn uses tried and tested components from leading suppliers, however there may be isolated instances of technology-related failures of individual LEDs during the rated product lifetime. International standards set the tolerance in initial flux and connected load at ±10%. Unless stated otherwise, the values apply to an ambient temperature of 25°C.

Thorn Lighting is constantly developing and improving its products. The right is reserved to change specifications without prior notification or public announcement.
© Thorn Lighting