Duoproof

96535720 <DUOPRF 2X36W T26 HF IP65 L840

Sealed IP65 recessed fluorescent luminaires

Recessed sealed luminaire IP65 for 2 x 36W Light Source: 2 x T26 / 36W lamp, electronic - fixed output ballast. Body fabricated from mild steel with white powder coated finish. Frame fabricated from mild steel, with welded corners, finished white powder coated. Gasket: silicone. Diffuser panel clear prismatic PET/G, impact resistant and flame retardant (UK Building Regs Part B2 classification TP[a]). Complete with 840 lamp(s).

Dimensions: 1192 x 290 x 90 mm
Luminaire input power: 70 W
Weight: 8.5 kg

TLG_DUOP_F_REC.jpg

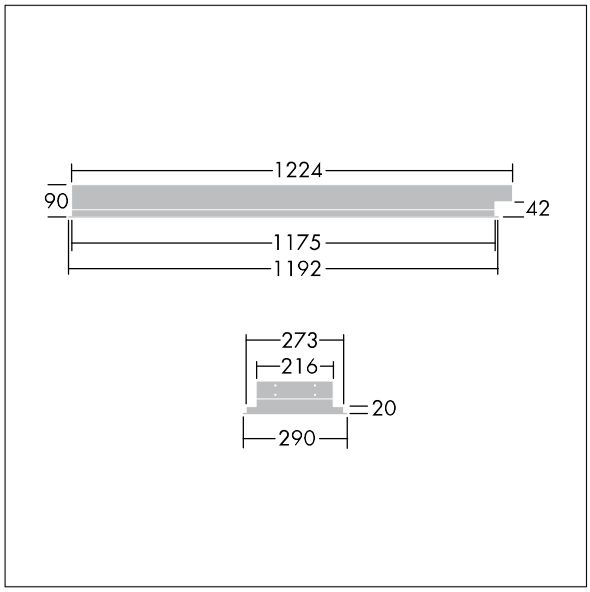

TLG_DUOP_M_LDT81200300.wmf

All values marked with an * are rated values. Unless stated otherwise, the values apply to an ambient temperature of 25°C.

Thorn Lighting is constantly developing and improving its products. The right is reserved to change specifications without prior notification or public announcement.
© Thorn Lighting